Electrolux PROFESSIONAL

ITEM #

MODEL #

NAME #

SIS #

AIA #

Dishwashing
Single rinse Rack Type dishwasher with Medium dryer, 100racks/hour, Electric, 50Hz



CC0ECC (ESR10E5D)

Single Rinse Rack Type Dishwasher with Medium Dryer, 100 racks/hour, electric, touch screen, insulated doors, customized direction on-site, 50Hz

Short Form Specification

Item No.

Unit to be single rinse rack type dishwasher. Single rinse with built-in stabilized pressure valve ensures the right rinsing pressure for optimum hygiene results. Maximum Water Contact (MWS) wash arms are positioned along the full length of the wash tank. Powerful wash pump and specially designed wash spray arms guarantee cleaning. Washing is done with water circulating at 55-65°C. Final rinsing is done with clean water heated up to 85°C. Low rinse water consumption of 1.5 liters per rack at maximum speed of 100racks/hour. Equipped medium dryer provides dry dishes using both internal and external air. One conveyor speed of 100racks per hour. Intuitive touch screen control panel provides easy communication on different levels. Large counter-balance door has heat and noise insulation with easy internal access. Operating direction of the machine is decided by customer on-site depending on the layout flow with pre-arranged right to left from the factory.

APPROVAL:

Main Features

- Electronically controlled to optimize drying results.
- Drying zone removes most of water from the crockery through a high powered fan that extracts dry air from outside mixing it with the internal air, thus providing dry plates at a temperature cool enough to handle safely.
- IP25 protection against water jets, solid objects and small animals (larger than 6 mm).
- Intuitive touch screen control panel features user-friendly display to easily operate the machine and to monitor machine status. Three different levels of interaction are available each show relevant messages and information to the operator, the general maintenance staff and the authorized service partners.
- All internal components: wash and rinse arms, tank filters, curtains can be easily removed for cleaning.
- Unit equipped with USB port making it simple to read data such as machine identification, counters and consumption, components, devices and alarm logs. Machine parameters can be uploaded and downloaded and firmware updated.
- Maximum capacity per hour of 100 racks.
- Large counter balanced inspection door allow unrestricted all-round access to the wash and rinse area. The insulated door reduces noise and heat loss.
- One conveyor speed can be selected through the control panel by the operator.

Construction

- Deep drawn pressed wash tank with fully rounded corners, sloped towards the drain to prevent dirt buildup, provides fast drainage in just a few minutes. With no welding points the pressed tank offers a guaranteed water tight solution.
- All electric components are put in one IP65 central box isolated from water and steam to ensure high reliability.
- Adjustable feet for full access underneath the machine for cleaning.
- External pre-arrangement for inlet water, drain water, detergent & rinse aid connections for fast and easy installation on both sides of the unit.
- All main components made in heavy duty anti-corrosive 304 type stainless steel: external front, side panels and internal chambers, wash and rinse arms, doors and rack transportation system.
- The chamber is pressed with fully rounded

corners without internal pipes and therefore no hidden dirt traps.

- The feeding direction is right to left as pre-arrangement from the factory, but it can be simply reversed on-site to left to right.
- The unit is built on modularity concept for easy to install on-site.

Sustainability

- Built-in stabilized pressure valve ensures constant pressure throughout the rinsing cycle regardless of inlet water pressure.
- Auto-start/stop equipped in different zones ensures that the zone runs only when a rack is passing through it. This reduces water, energy, chemical consumption and noise.
- Single rinse with stabilized pressure valve guarantees rinse water consumption of 1.5 liters/ rack regardless of inlet water pressure to ensure low energy, water, detergent and rinse aid consumption.
- Self-draining vertical wash pumps provide maximum hygiene.
- Automatic back-up mode is activated when a failure occurs. Guided troubleshooting for fast fixes including 150 precises notifications and 23 easy-to-follow processes.

Optional Accessories

• Plain undershelf with hole for drain for Hot Air Blower, 560 mm	PNC 863228	❑
• Grid undershelf for Hot Air Blower, 555 mm	PNC 863229	❑
• ESD for single-rinse Rack Type dishwasher, electric	PNC 864478	❑
• Emergency stop kit for Rack Type Dishwasher (not for Basic handling system)	PNC 865162	❑
• End limit switch for short roller conveyor	PNC 865218	❑
• Connection bracket for plain undershelf and grid undershelf (to be used if roller conveyor is connected directly to Rack Type Dishwasher with splash hood)	PNC 865235	❑
• End limit switch for long roller conveyor (kit with two short rollers and end switch)	PNC 865256	❑
• Pair of legs for long conveyors connected directly to the Rack Type Dishwasher with hot air blower	PNC 865477	❑
• Kit of hot water softener for Rack Type dishwasher	PNC 865495	❑
• Splash hood kit for single and dual rinse Rack Type Dishwasher, 200 mm	PNC 865498	❑
• Silicon courtains for single and dual rinse Rack Type dishwasher	PNC 865503	❑
• Set of 6 baskets: 2 for trays, 2 for plates, 1 for cutlery and 1 for cups	PNC 867050	❑
• Set of 9 baskets: 2 for trays, 3 for plates, 2 for cutlery and 2 for cups	PNC 867051	❑

Components

•1 of **534058** (ESR10E5) Single Rinse Rack Type Dishwasher, 100 racks/hour, electric, touch screen, insulated doors, customized direction on-site, 50Hz

- **Shipping weight:** 228 kg
- **Shipping height:** 2010 mm
- **Shipping width:** 1000 mm
- **Shipping depth:** 1320 mm
- **Shipping volume:** 2.65 m³
- **Current consumption:** 0 Amps

•1 of **534059** (NMHSDRE56) Medium hot air blower zone without door for single rinse Rack Type dishwasher, 50Hz & 60Hz

- **Shipping weight:** 61 kg
- **Shipping height:** 1310 mm
- **Shipping width:** 920 mm
- **Shipping depth:** 610 mm
- **Shipping volume:** 0.74 m³
- **Current consumption:** 0 Amps

Electrolux PROFESSIONAL

Dishwashing
Single rinse Rack Type dishwasher with Medium dryer, 100racks/hour, Electric, 50Hz

Front

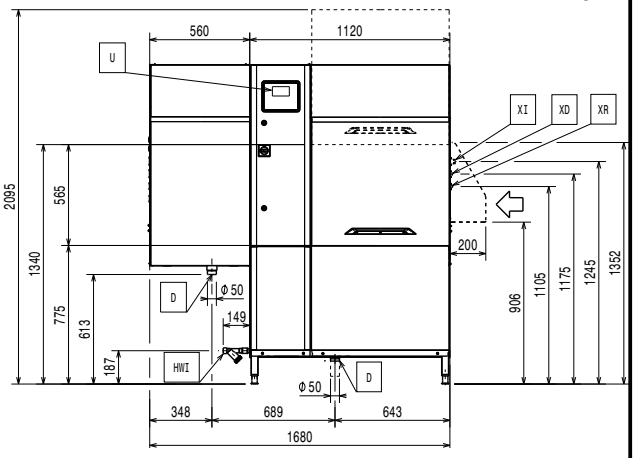

Side

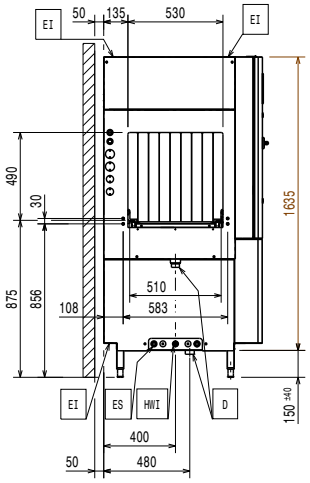

D = Drain
EI = Electrical inlet (power)
EO = Electrical Outlet
EQ = Equipotential screw
ES = Electrical signal IN/OUT
U = USB port
WI = Water inlet

Top

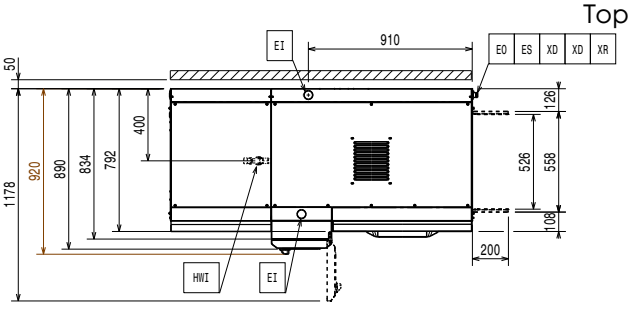

Front

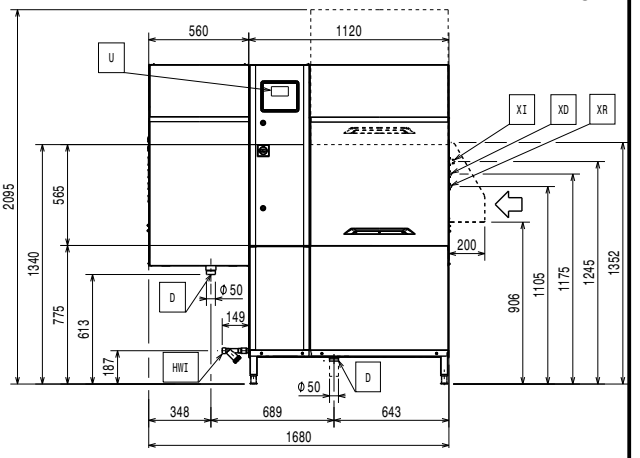

Side

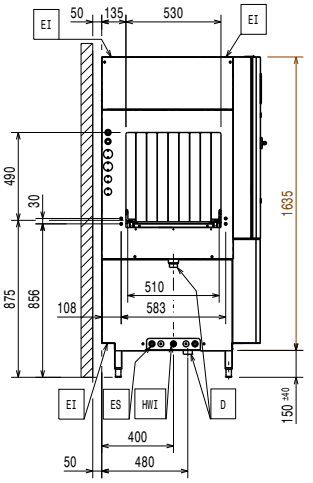

D = Drain
EI = Electrical inlet (power)
EO = Electrical Outlet
EQ = Equipotential screw
ES = Electrical signal IN/OUT
U = USB port
WI = Water inlet

Top

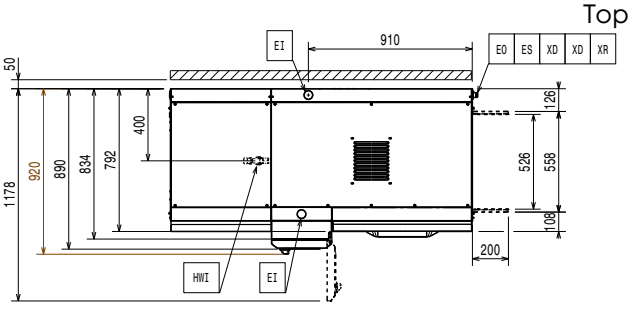

Electrolux PROFESSIONAL

Dishwashing
Single rinse Rack Type dishwasher with Medium dryer, 100racks/hour, Electric, 50Hz

Electric

Supply voltage:	380-415 V/3N ph/50 Hz
Default Installed Power:	29.6 kW
Boiler heating elements:	12 kW
Wash pump size:	1.18 kW
Wash tank heating elements:	12 kW

Water:

The higher the temperature, the faster the warm up. When there is ESD option installed, the machine should be connected to cold water up to 30°C.

When below 7°fH/4°dH special detergent and rinse aid are needed.

Inlet hot water line size:	
Inlet cold water line size:	G 3/4"
Drain line size:	50mm
Inlet water supply pressure:	1.5-7 bar
Inlet water supply temperature (wash and rinse):	50 - 65°C
Inlet water supply hardness:	5-8 °fH / 2.8-4.5°dH
Flow rate of wash pump:	400 l/min
Peak rate of drain flow:	2.5 l/s
Flow rate of wash pump:	400 l/min
Wash tank size:	70 l

Key Information:

For transportation purpose only, the depth can be reduced to either 890mm by removing the main switch button or 792mm by removing the control box and the door handle.

For shipping data, please refer to price list.

Reference norm used to measure the noise: IEC60335-2-58 annex AA.

Height with door open:	2095 mm
Charging hole size (width):	530 mm
External dimensions, Width:	1680 mm
External dimensions, Depth:	920 mm
Charging hole size (height):	490 mm
Wash Temperature:	55 - 65 °C
Table to table distance:	1680 mm
Productivity per hour (max speed):	100racks/1800dishes
Dryer air flow:	540 m³/h
Dryer air temperature:	70 °C
Final rinse temperature:	85 °C
Drying fan capacity:	540 m³/h

Air Emission:

Air humidity:	
CC0ECC (ESR10E5D)	100 % r.h.
Latent heat:	
CC0ECC (ESR10E5D)	8800 W
Sensible heat:	7500 W
Air flow:	107 m³/h
Air temperature (top, exit):	45 °C

The data is measured at exhaust points at 25°C and 60% r.h. ambient conditions, 18°C inlet water temperature and refer only to the machine.

This model requires a ventilation hood. Please refer to the attached "Recommended Exhaust Hood Design".

Rinse water consumption at max speed (l/rack):	1.5 lt/rack
Rinse water consumption at max. speed (l/h):	150 l/h

RECOMMENDED TABLE CONNECTION

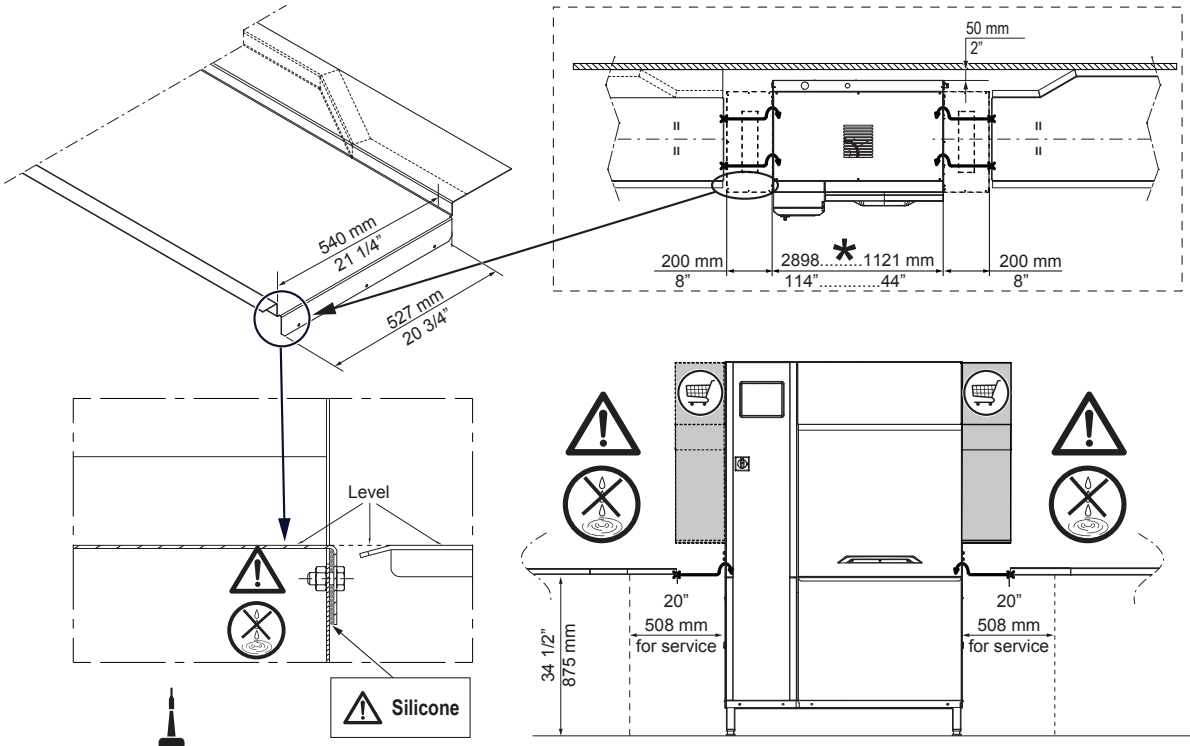

SILICONE

⚠ **Apply silicone between the machine and the table and make sure that there are not any water leakages.**
Reference code 059611 for recommended silicone by Electrolux.

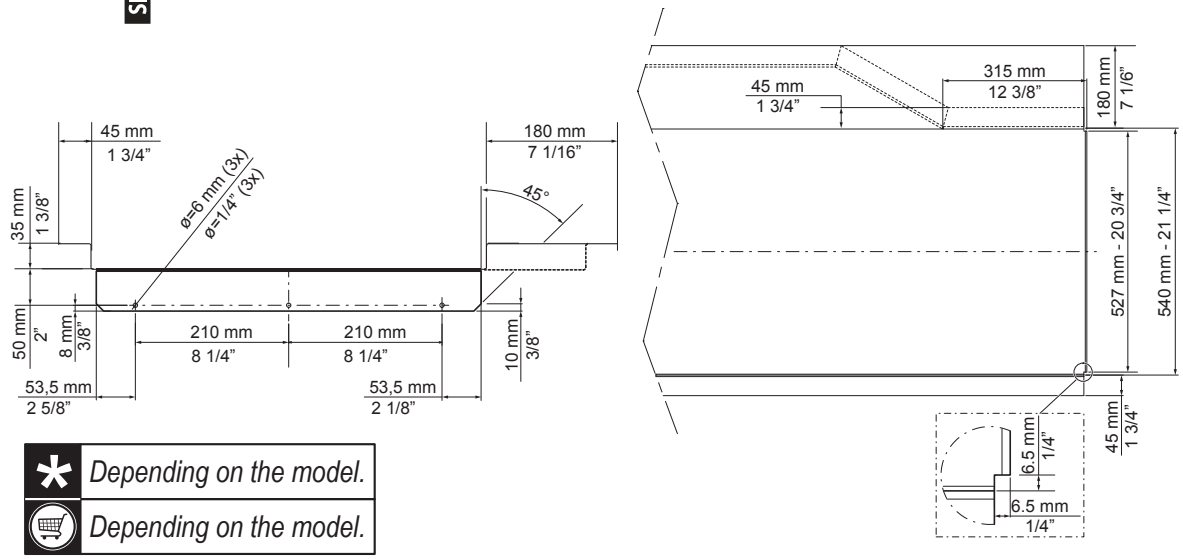

*	*Depending on the model.*
🛒	*Depending on the model.*

All tables must be connected to the dishwashing units according to local regulations and industry standards which may differ from the recommendations herein suggested. Electrolux Professional is not liable for any failure in complying with local design standards.

DOC. NO. 59566QD00
EDITION 01.2020

RECOMMENDED HOOD DESIGN OPTIONS

NO ESD = ✔
ESD = ✔

B	500 ÷ 700mm

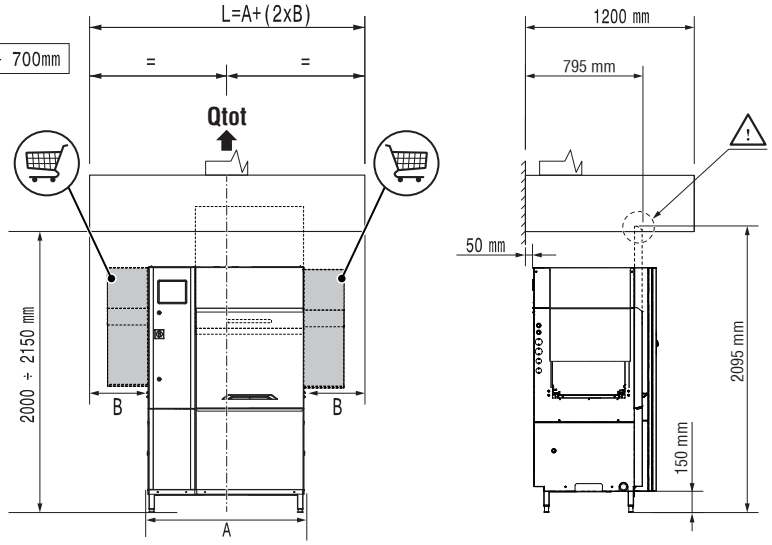

Qtot (VDI 2052)	
100 r/h no ESD no Dryer	1100 m³/h
100 r/h ESD no Dryer	1350 m³/h
100 r/h no ESD + 1 Dryer	1200 m³/h
100 r/h ESD + 1 Dryer	1550 m³/h

NO ESD = ✔
ESD = ✗

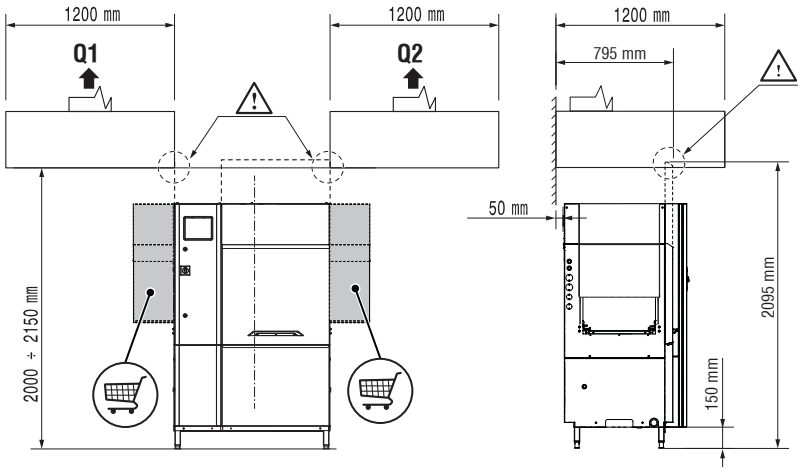

Qtot (VDI 2052)	
100 r/h no ESD no Dryer	1100 m³/h
100 r/h ESD no Dryer	1350 m³/h
100 r/h no ESD + 1 Dryer	1200 m³/h
100 r/h ESD + 1 Dryer	1550 m³/h

NO ESD = ✔
ESD = ✗

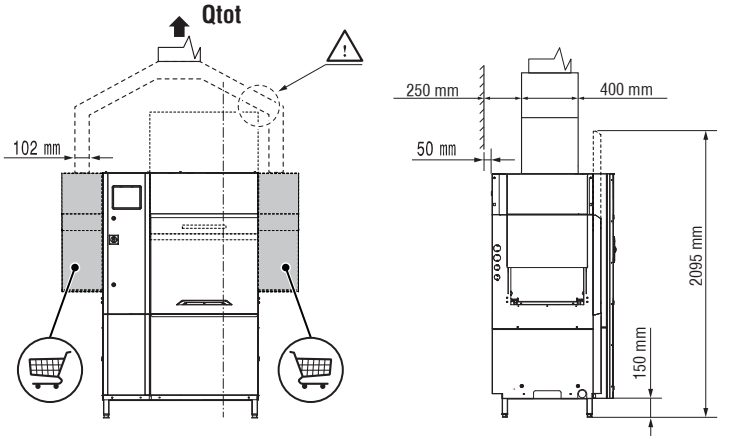

Qtot (VDI 2052)	
100 r/h no ESD no Dryer	1100 m³/h
100 r/h ESD no Dryer	1350 m³/h
100 r/h no ESD + 1 Dryer	1200 m³/h
100 r/h ESD + 1 Dryer	1550 m³/h

All exhaust hoods must be dimensioned and installed according to local regulations and industry standards which may differ from the recommendations herein suggested. Electrolux Professional is not liable for any failure in complying with local design standards.

DOC. NO. 59566QF00
EDITION 09.2019

The company reserves the right to make modifications to the products without prior notice. All information correct at time of printing.

2026.11.23